Electraflow Plus Cart 310

Parts List

STOCK No	DESCRIPTION	QTY
2F1204	M8 Lock Nut	1
2F1781	Screw	1
2M2069	Black Washer	1
2M6135	Barrel Screw Insert	1
2M6136	Rack Pull	1
2M6137	Electraflow Plus Rack Lock	1
2P1092	40mm Tin Hat Plunger (Nitrotec Hardened)	1
2XB031	Barrel Screw	1
2XH002	Hanging Hook	1
2XS022	Support Strap	2
3F2419	Steel Washer	1
3F2439	Formed Washer	1
3R8384	Rack (11.0 x 9.50)	1
4BE1011	Frame Assembly	1
4E1001	Cox Electraflow 18v Butt Assembly	1
7E1601	18v 1.5 Ah Battery	1

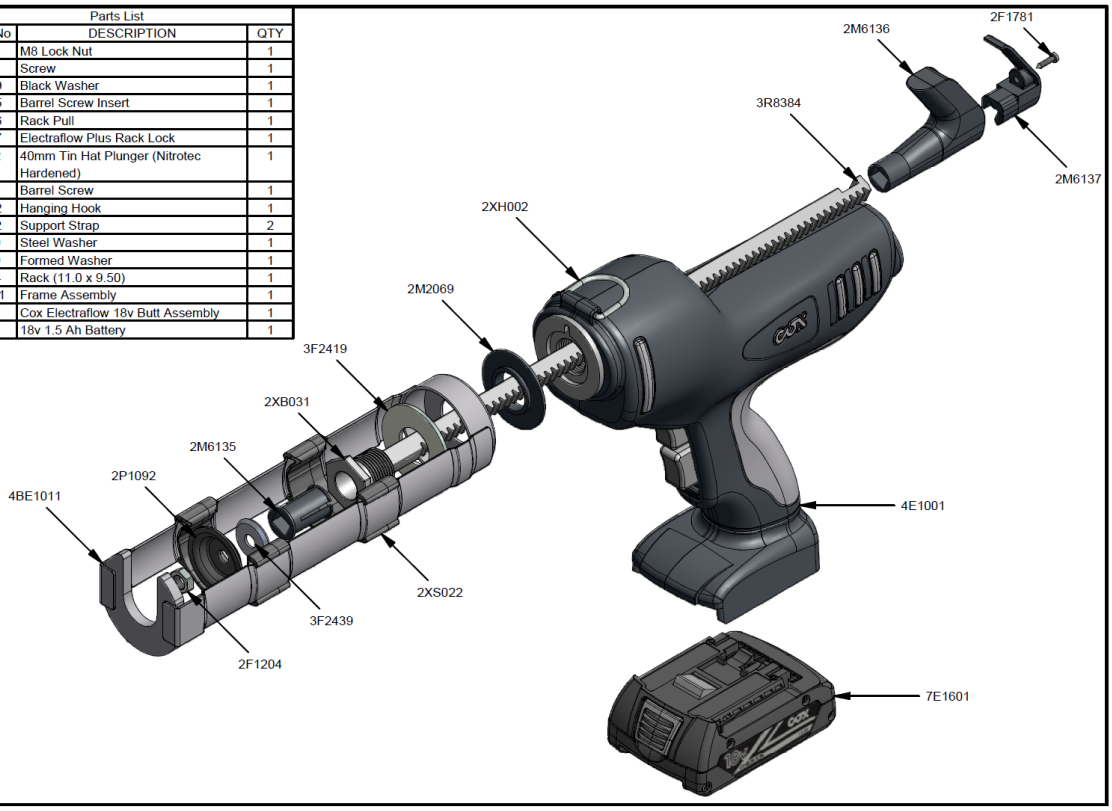

Parts List
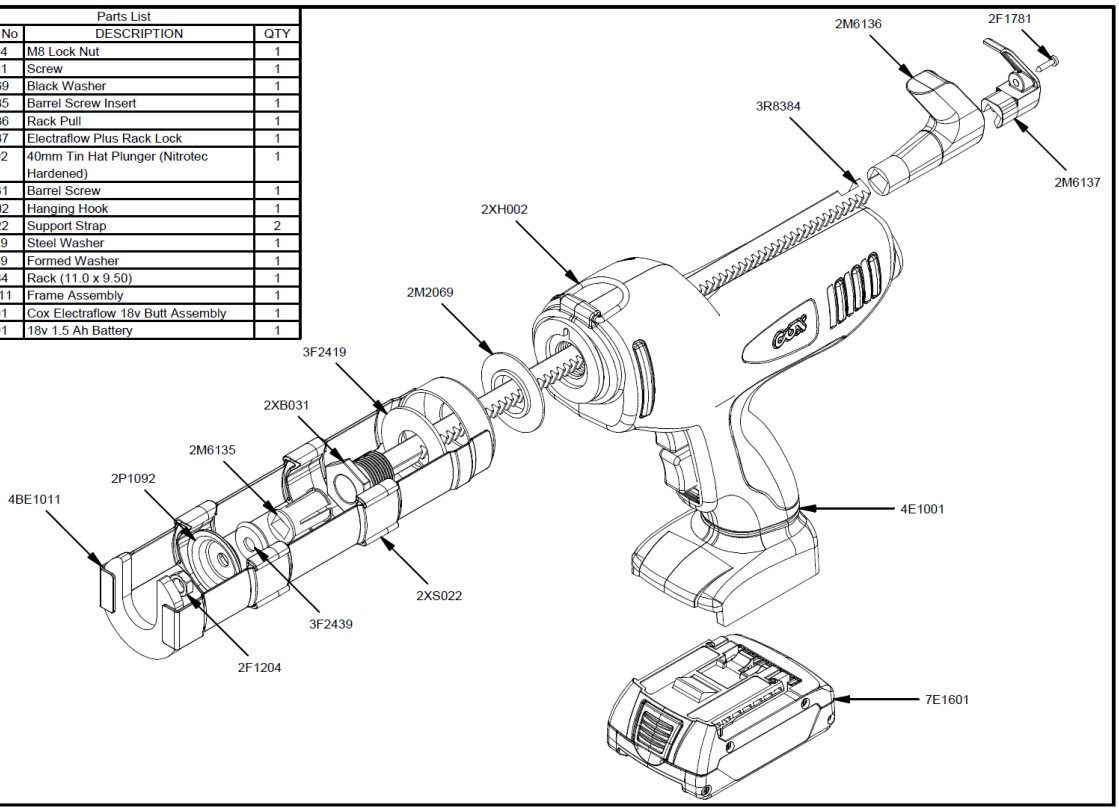
STOCK No	DESCRIPTION	QTY
2F1204	M8 Lock Nut	1
2F1781	Screw	1
2M2069	Black Washer	1
2M6135	Barrel Screw Insert	1
2M6136	Rack Pull	1
2M6137	Electraflow Plus Rack Lock	1
2P1092	40mm Tin Hat Plunger (Nitrotec Hardened)	1
2XB031	Barrel Screw	1
2XH002	Hanging Hook	1
2XS022	Support Strap	2
3F2419	Steel Washer	1
3F2439	Formed Washer	1
3R8384	Rack (11.0 x 9.50)	1
4BE1011	Frame Assembly	1
4E1001	Cox Electraflow 18v Butt Assembly	1
7E1601	18v 1.5 Ah Battery	1