# CCM 380 1:1

| Parts List | | |
|---|---|---|
| STOCK No | DESCRIPTION | QTY |
| 2C1002 | Mk5 Catch Plate | 1 |
| 2F1204 | M8 Lock Nut | 2 |
| 2F1211 | M6 Nut | 4 |
| 2F1421 | Washer | 1 |
| 2M1016 | Blue Washer | 1 |
| 2M1085 | Plastic Knob | 1 |
| 2P1006 | Plunger Ally 31.50mm | 1 |
| 2S1007 | Catch Plate Spring | 1 |
| 2S1021 | Release Plate Spring | 1 |
| 3R1472 | Release Plate | 1 |
| 3R1893 | Drive Rod 300mm | 1 |
| 3Y1006 | Yoke | 1 |
| 4AW1004 | Co-Axial Plunger | 1 |
| 4AW1009 | Frame Assembly (Red) | 1 |
| 7XB036 | Hexagonal Zinc Barrel Screw (Bushed) | 1 |
| 7XB208 | Mk 6 Butt and Trigger With Pin and WCD Sleeve | 1 |

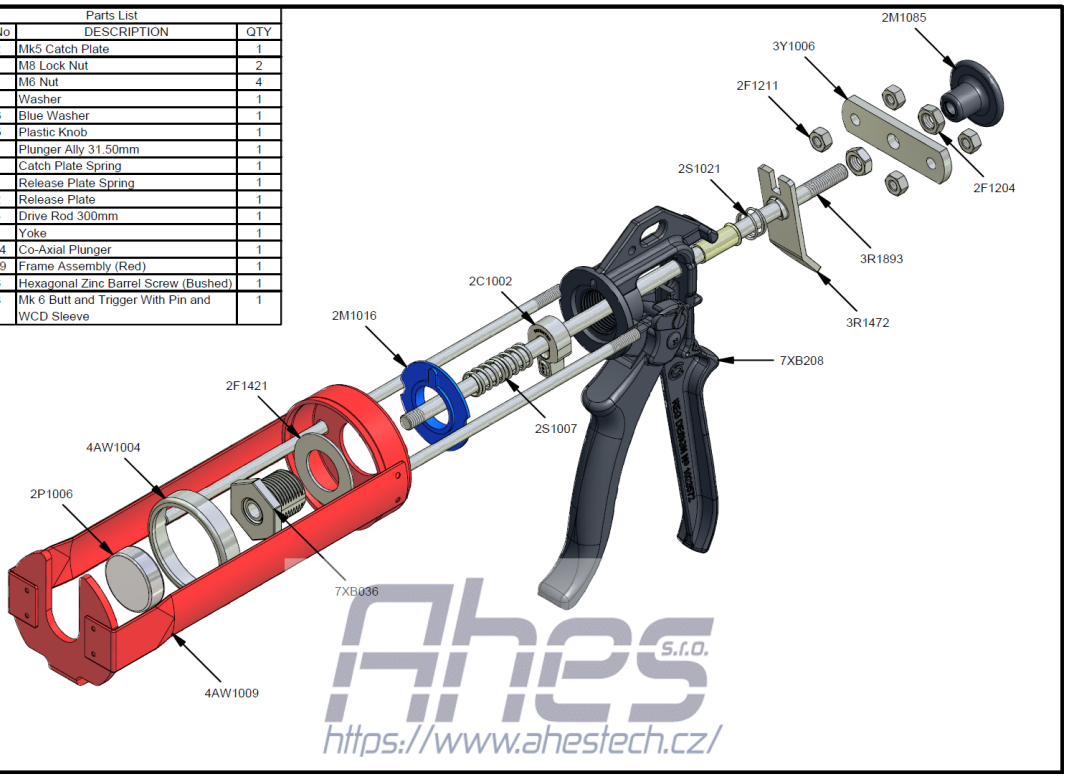

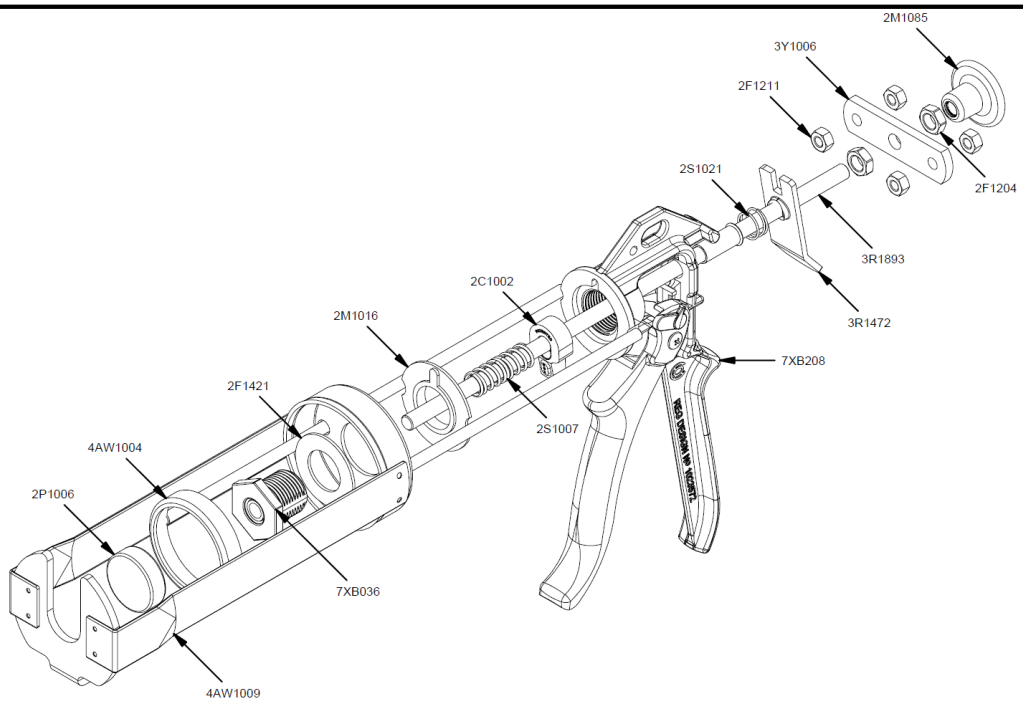
Ahes s.r.o.
https://www.ahestech.cz/