CCM 310 1:1

Parts List		
STOCK No	DESCRIPTION	QTY
2C1002	Mk5 Catch Plate	1
2F1204	M8 Lock Nut	2
2F1211	M6 Nut	2
2F1233	1/4" UNC Nut	4
2F1642	M6 x 16mm Button Head Screw	2
2M1085	Plastic Knob	1
2P1005	Plunger Ally 25mm	1
2S1007	Catch Plate Spring	1
2S1021	Release Plate Spring	1
2XS022	Support Strap	2
3R1472	Release Plate	1
3Y1043	Yoke	1
4AW5201	Frame Assembly (Red)	1
4AW5504	Co-Axial Plunger	1
7R1195	Rod 349mm	1
7XB250	Mk7 Butt/Trigger/Pin/WCD Assembly	1

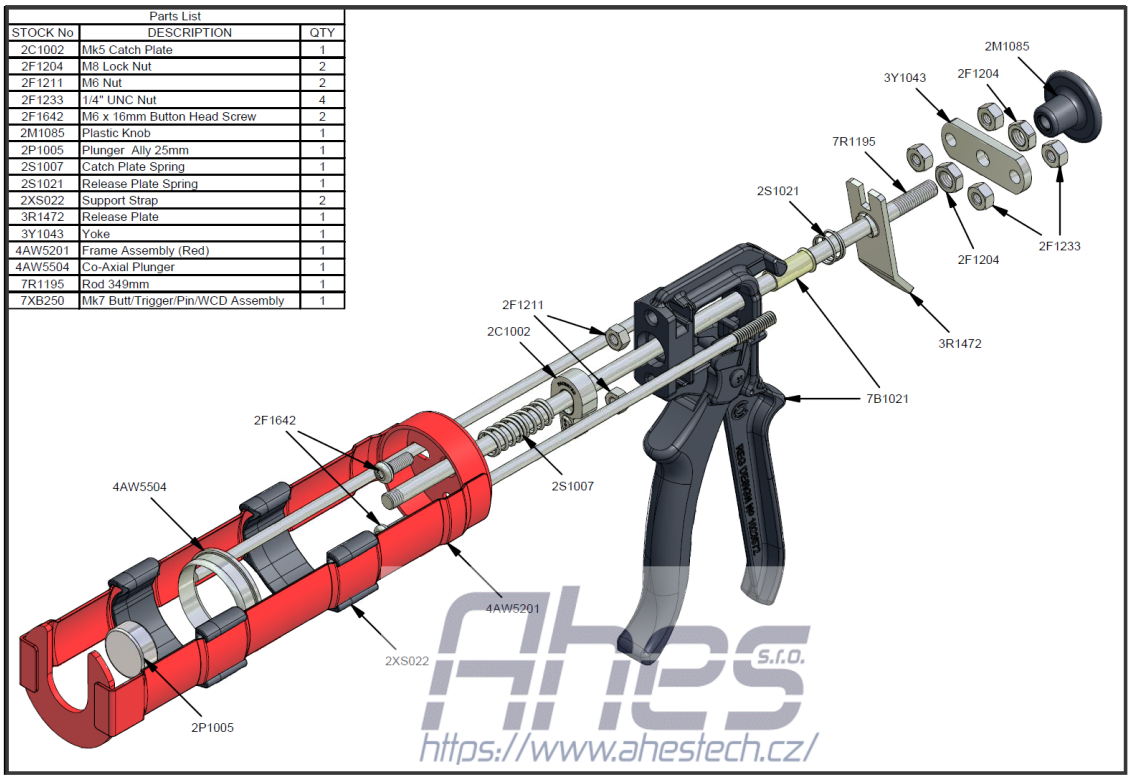
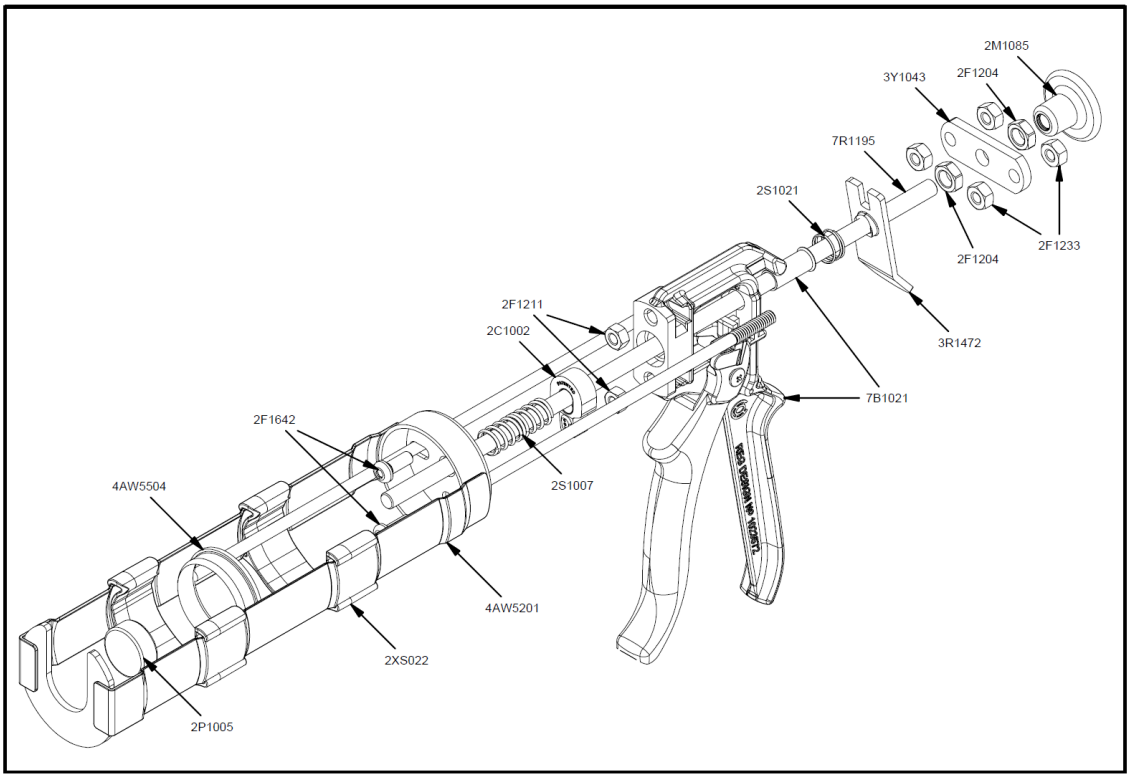
AHES s.r.o.
https://www.ahestech.cz/