Airflow II Combi 400

Parts List		
STOCK No	DESCRIPTION	QTY
2C1801	Cap Plastic 2 Start	2
2F1204	M8 Lock Nut	2
2M1015	Yellow Plastic Washer	1
2M1086	Cartridge Locator	1
2M2044	Dump Valve Body	1
2P1021	Split Sachet Plunger	1
2P1026	Series 2 Piston Body	1
2S1025	Cartridge Locator Spring	1
2S2007	O Ring	2
2S2144	U Type Seal	1
2S2150	Dump Valve Diaphragm	1
3B5048	Bulkhead	1
3F2419	Steel Washer	1
3F3005	Cord Retainer Pin	1
3P1006	Steel 40mm 'Tin Hat' Plunger	1
4B1300	Series 2 Air Gun Butt Assembly	1
7A2001	European Quick Release Fitting Assembly	1
7A2002	US Quick Release Fitting Assembly	1

Parts List		
STOCK No	DESCRIPTION	QTY
7A2004	Standard Nut & Tail Connection	1
7A3003	Series 2 Regulator Assembly	1
7A3101	Silencer Assembly	1
7B2003	Barrel 267mm	1
7B3061	Rear Barrel 315mm	1
7R1101	Rod 267mm	1
7XB036	Hexagonal Zinc Barrel Screw (Bushed)	1
7XS008	Series 2 Barrel Strap Assembly (including screws/nuts)	1

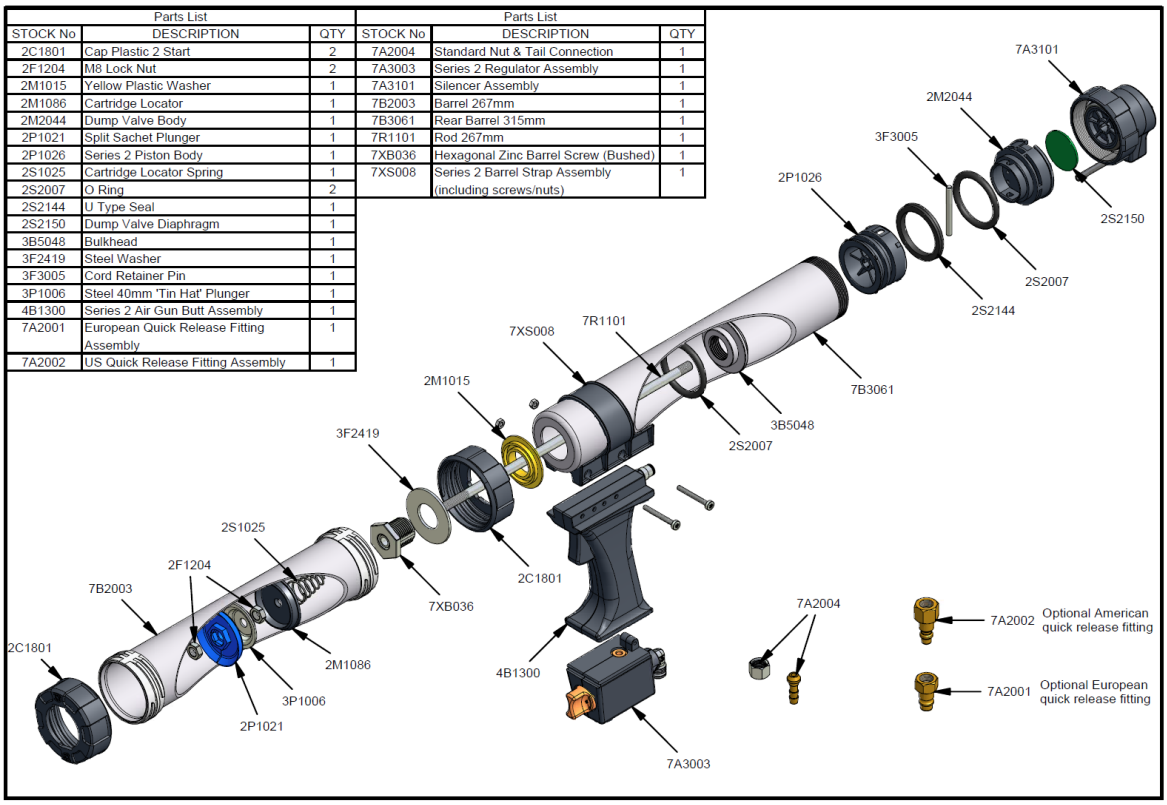

Parts List		
STOCK No	DESCRIPTION	QTY
2C1801	Cap Plastic 2 Start	2
2F1204	M8 Lock Nut	2
2M1015	Yellow Plastic Washer	1
2M1086	Cartridge Locator	1
2M2044	Dump Valve Body	1
2P1021	Split Sachet Plunger	1
2P1026	Series 2 Piston Body	1
2S1025	Cartridge Locator Spring	1
2S2007	O Ring	2
2S2144	U Type Seal	1
2S2150	Dump Valve Diaphragm	1
3B5048	Bulkhead	1
3F2419	Steel Washer	1
3F3005	Cord Retainer Pin	1
3P1006	Steel 40mm 'Tin Hat' Plunger	1
4B1300	Series 2 Air Gun Butt Assembly	1
7A2001	European Quick Release Fitting Assembly	1
7A2002	US Quick Release Fitting Assembly	1
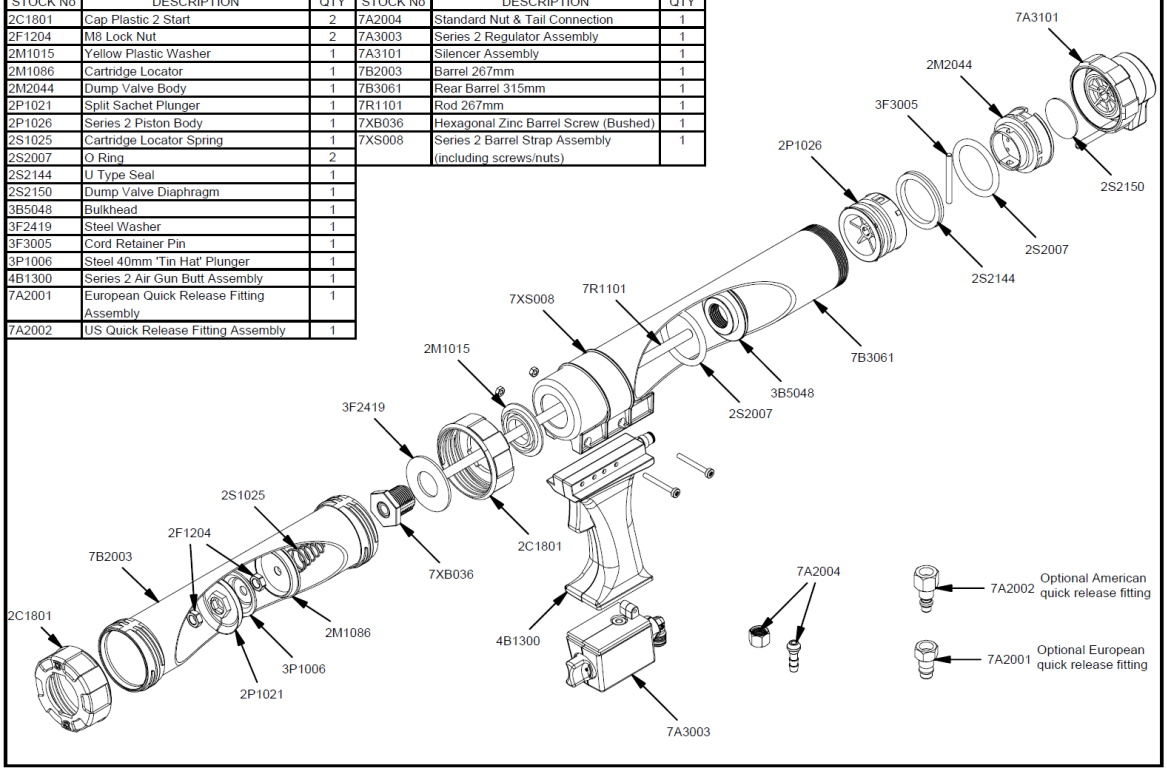
Parts List		
STOCK No	DESCRIPTION	QTY
7A2004	Standard Nut & Tail Connection	1
7A3003	Series 2 Regulator Assembly	1
7A3101	Silencer Assembly	1
7B2003	Barrel 267mm	1
7B3061	Rear Barrel 315mm	1
7R1101	Rod 267mm	1
7XB036	Hexagonal Zinc Barrel Screw (Bushed)	1
7XS008	Series 2 Barrel Strap Assembly (including screws/nuts)	1