Ultrapoint Air

Parts List		
STOCK No	DESCRIPTION	QTY
2B4001	Plastic Barrel	1
2F1204	M8 Lock Nut	2
2F1210	M8 Nylock Nut	1
2F1421	Washer	1
2M1012	Grey Plastic Washer	1
2N1030	Plastic pointing cone	1
2N1042	Grouting Nozzle	1
2S2025	O Ring	1
2S2037	O Ring	1
2S2132	Reducer Seal	1
2S2133	Pointing Gun Seal	1
2S2134	U Type Seal	1
2S2150	Dump Valve Diaphragm	1
3B5111	Bulkhead Bung	1
3F2426	Washer 60mm	3
3M1100	Cox Turbine Mixer	1
3P1109	Piston (including air return fitting)	1
3R2108	Rod 390mm	1
3R4009	Threaded Backing Ring	1
3R4010	Reducer	1
3T3500	Coiled Tube	1
4AF1006	Frame Assembly (Orange)	1
4B1200	Air Gun Butt Assembly	1
7A1500	Dump Valve Body assembly	1

Parts List		
STOCK No	DESCRIPTION	QTY
7A1507	Regulator Assembly (including O ring and washer)	1
7A1508	Spool Valve (Brass button)	1
7A2000	Standard Nut and Tail Connection	1
7A2001	European Quick Release Fitting Assembly	1
7A2002	US Quick Release Fitting Assembly	1
7B6090	Rear Barrel 400mm	1
7C1001	Air Gun Back Cap	1
7XB046	Barrel Screw (Bushed with O Ring)	1
7XS012	Barrel Strap Assembly (inc screws and nuts)	1

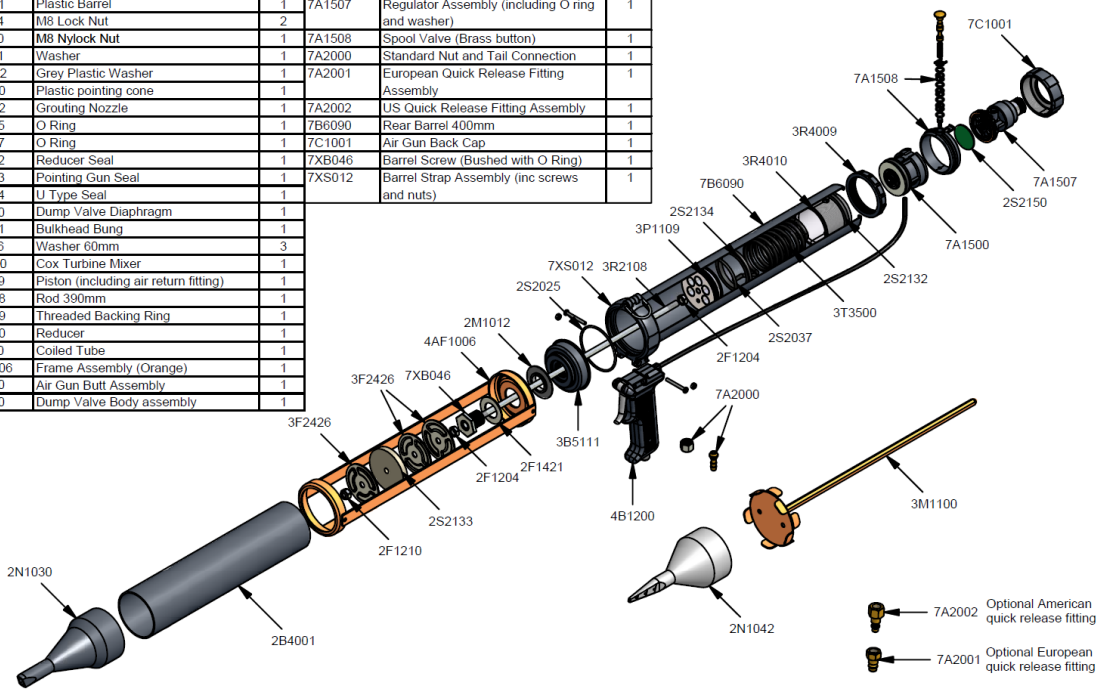

Parts List		
STOCK No	DESCRIPTION	QTY
2B4001	Plastic Barrel	1
2F1204	M8 Lock Nut	2
2F1210	M8 Nylock Nut	1
2F1421	Washer	1
2M1012	Grey Plastic Washer	1
2N1030	Plastic pointing cone	1
2N1042	Grouting Nozzle	1
2S2025	O Ring	1
2S2037	O Ring	1
2S2132	Reducer Seal	1
2S2133	Pointing Gun Seal	1
2S2134	U Type Seal	1
2S2150	Dump Valve Diaphragm	1
3B5111	Bulkhead Bung	1
3F2426	Washer 60mm	3
3M1100	Cox Turbine Mixer	1
3P1109	Piston (including air return fitting)	1
3R2108	Rod 390mm	1
3R4009	Threaded Backing Ring	1
3R4010	Reducer	1
3T3500	Coiled Tube	1
4AF1006	Frame Assembly (Orange)	1
4B1200	Air Gun Butt Assembly	1
7A1500	Dump Valve Body assembly	1
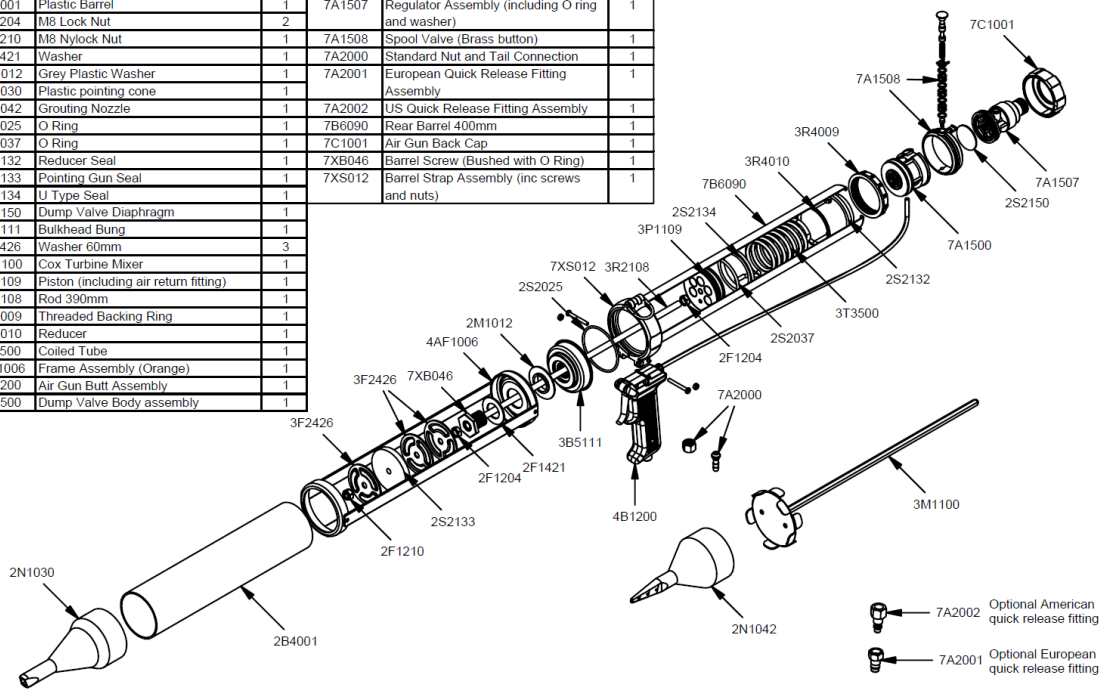
Parts List		
STOCK No	DESCRIPTION	QTY
7A1507	Regulator Assembly (including O ring and washer)	1
7A1508	Spool Valve (Brass button)	1
7A2000	Standard Nut and Tail Connection	1
7A2001	European Quick Release Fitting Assembly	1
7A2002	US Quick Release Fitting Assembly	1
7B6090	Rear Barrel 400mm	1
7C1001	Air Gun Back Cap	1
7XB046	Barrel Screw (Bushed with O Ring)	1
7XS012	Barrel Strap Assembly (inc screws and nuts)	1